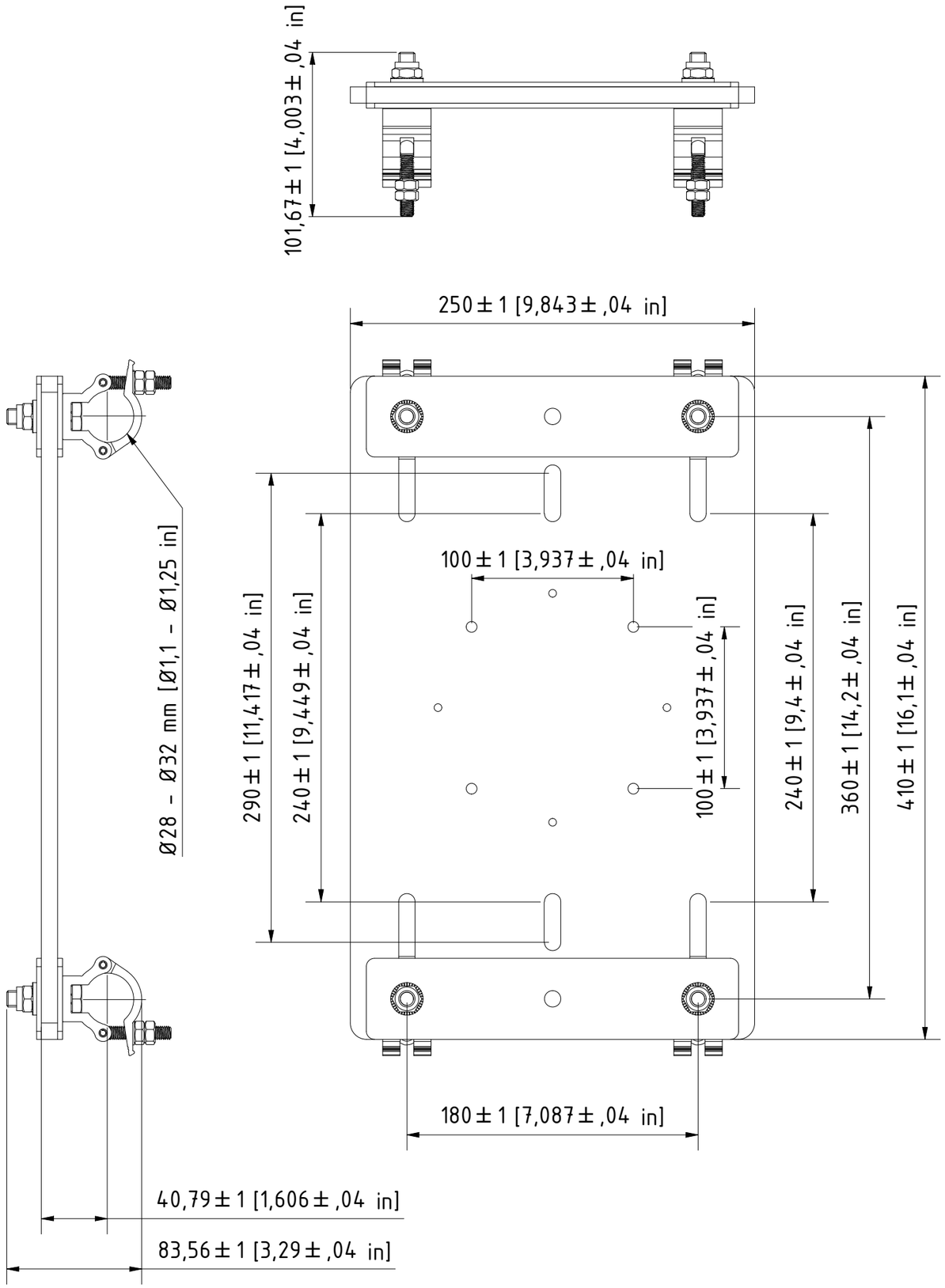

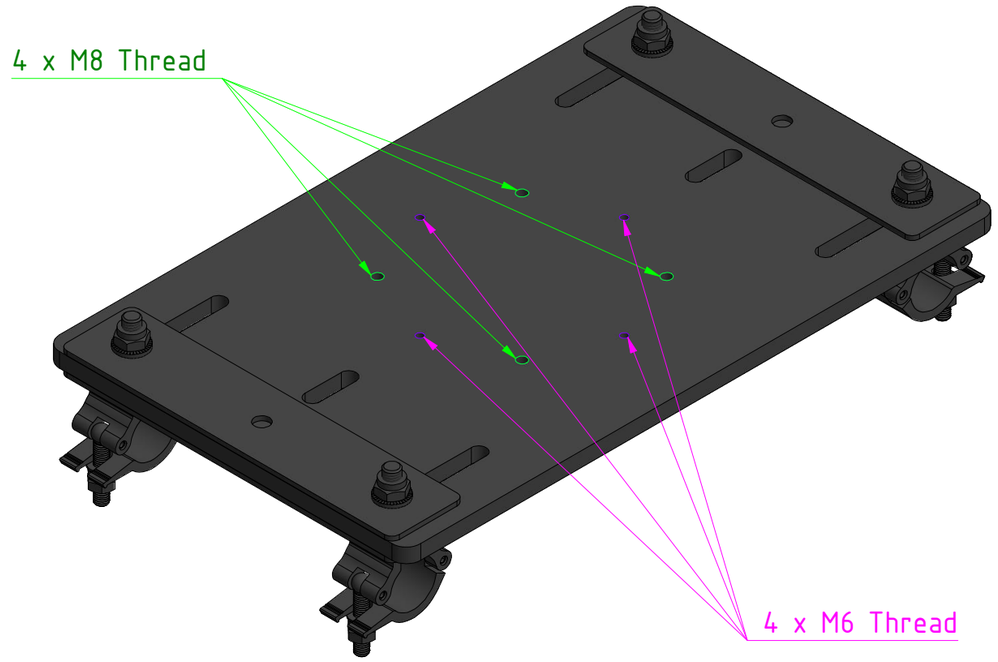

EXACT SOLUTIONS

© COPYRIGHT EXACT SOLUTIONS
This print and the information shown thereon, is the property of **EXACT SOLUTIONS**. It may not be delivered to others nor reproduced for general circulation without the written consent of the **EXACT SOLUTIONS**.

	Date	Name
Author	22.09.2025	JK
Checked		
Approved		

Dimensions in mm

Status	Change log	Date	Name

Design and specifications subject to change without notice

Material:

Revision: 02

Weight: 4.7 kg

Title:
Portrait Adapter for Projector Frames with 30mm Tube Diameter

Part Nr.:
PF-UNI-PORAD

SCALE: 1 : 3

A3

Number of pages: 1/2

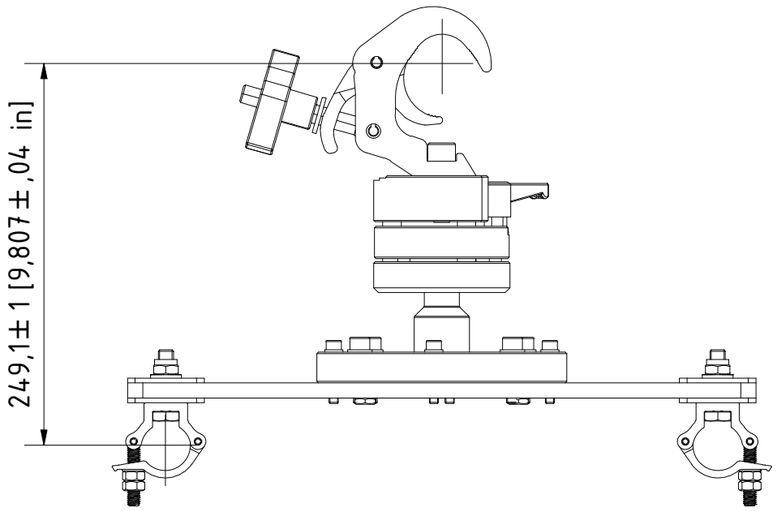

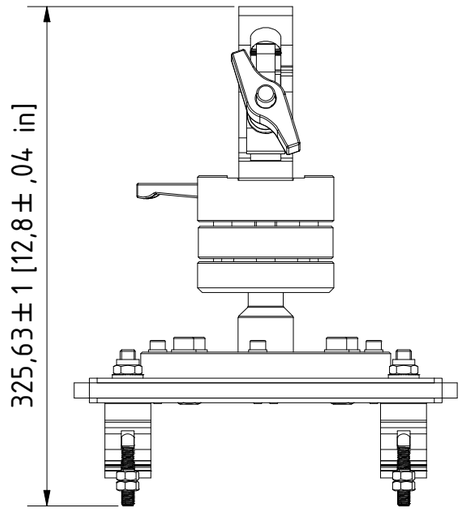

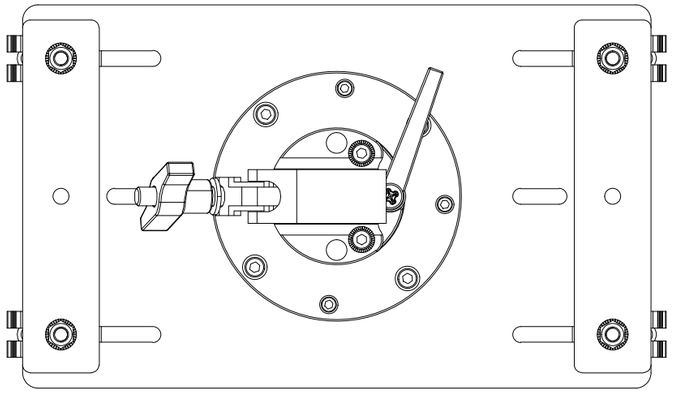

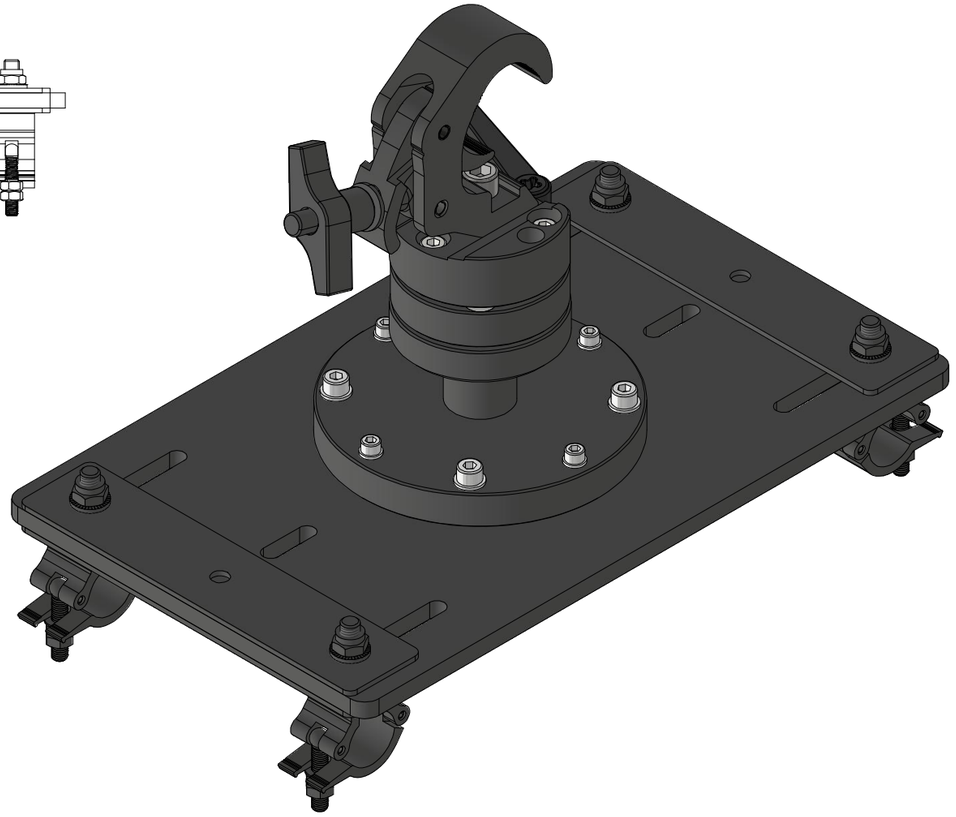

PF-UNI-PORAD
with EVO-LINK-200

EXACT SOLUTIONS

© COPYRIGHT EXACT SOLUTIONS
This print and the information shown thereon, is the property of **EXACT SOLUTIONS**. It may not be delivered to others nor reproduced for general circulation without the written consent of the **EXACT SOLUTIONS**.

Status	Change log	Date	Name

	Date	Name
Author	22.09.2025	JK
Checked		
Approved		

Dimensions in mm

Design and specifications subject to change without notice

Material:

Revision:

Weight: -

Title:
Portrait Adapter for Projector Frames with EVO-LINK-200

Part Nr.:
PF-UNI-PORAD with EVO-LINK-200

SCALE: 1 : 4

A3

Number of pages: 2/2