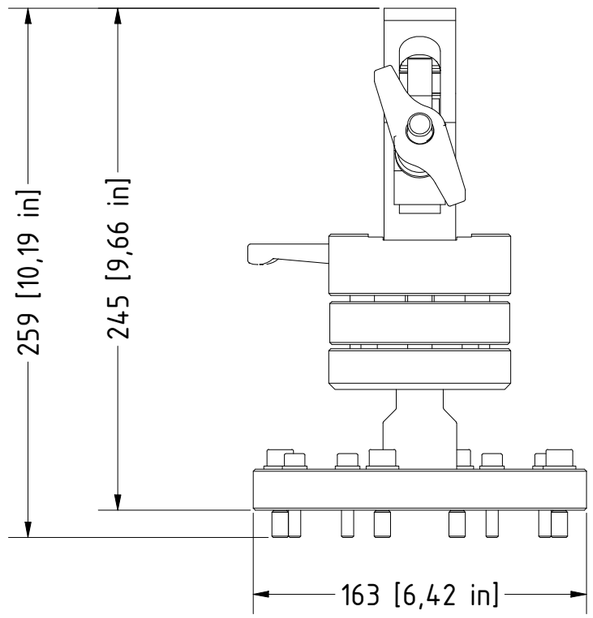

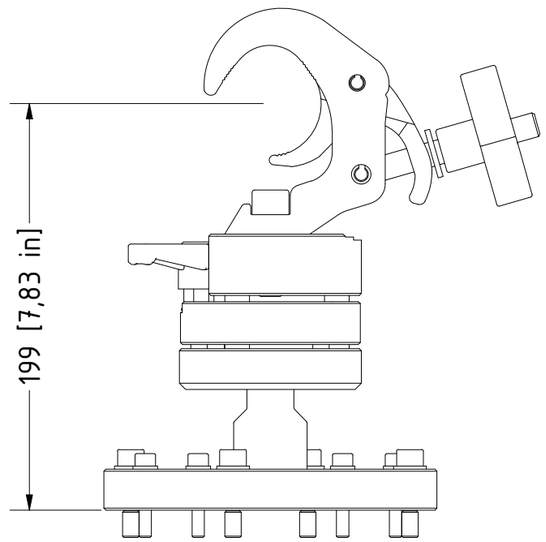

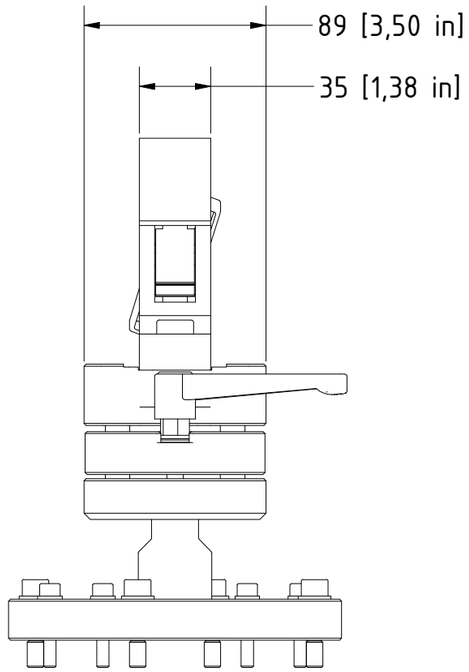

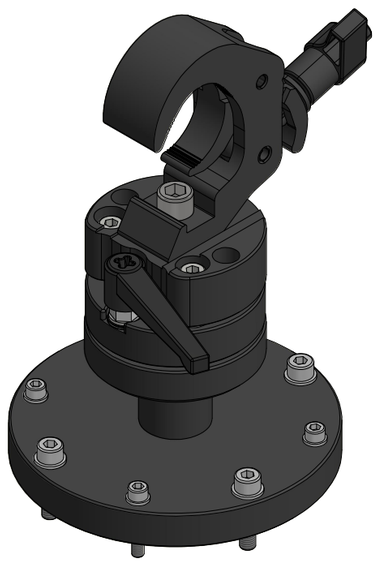

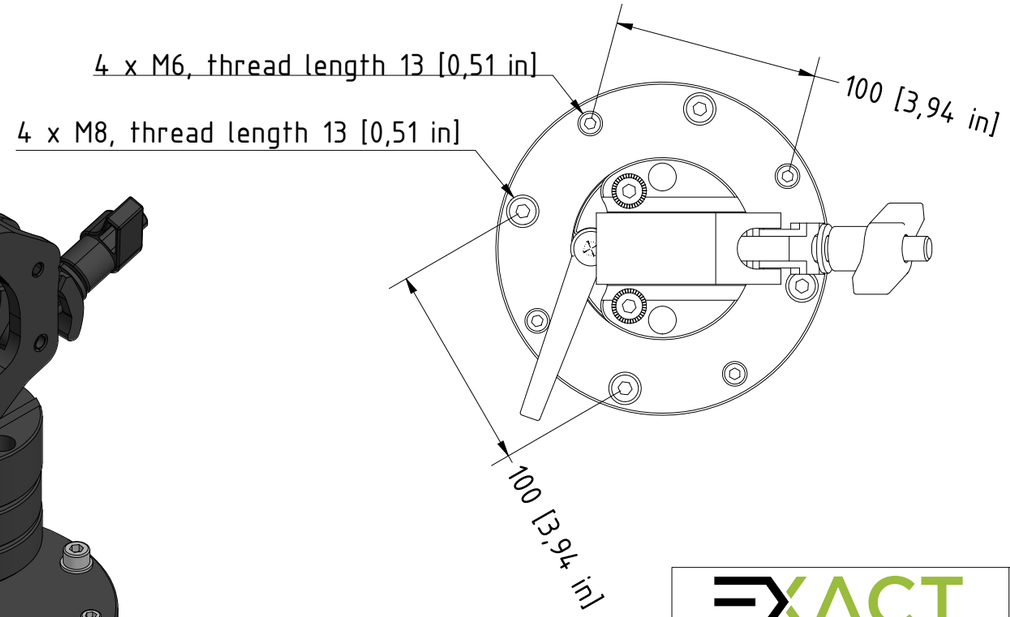

EXACT SOLUTIONS

© COPYRIGHT EXACT SOLUTIONS
This print and the information shown thereon, is the property of **EXACT SOLUTIONS**. It may not be delivered to others nor reproduced for general circulation without the written consent of the **EXACT SOLUTIONS**.

	Date	Name
Author	13/11/2019	Victor Ibanescu
Checked		
Approved		

Dimensions in mm

Status	Change log	Date	Name

Material:

Revision: 02

Weight: 3.100 kg

Title:
EVO-LINK-200 Trussmount

Part Nr.:
EVO-LINK-200

SCALE: 1 : 3

A3

Number of pages: 1/1